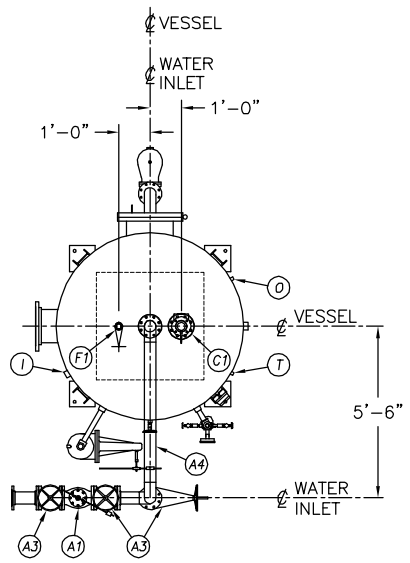

TOP VIEW

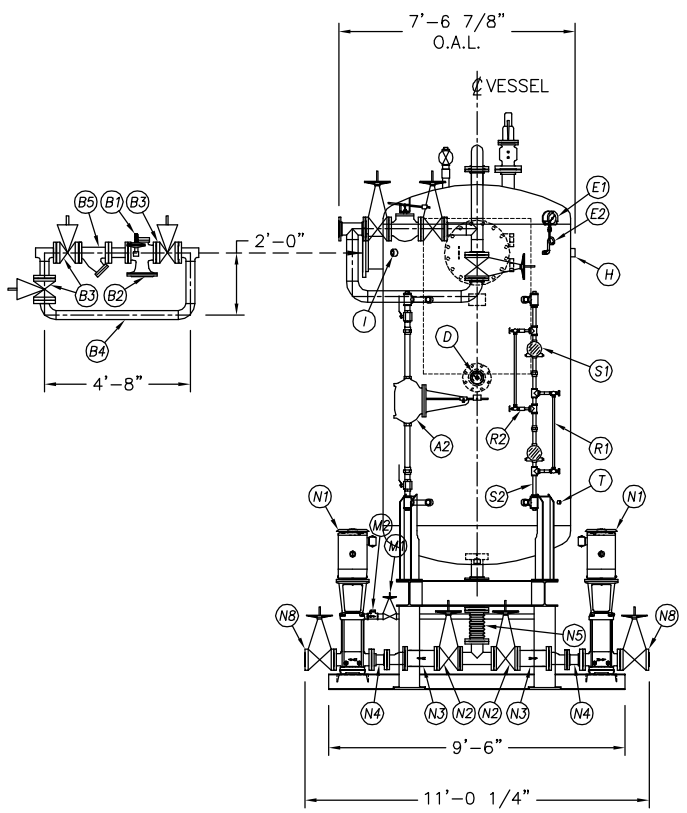

FRONT VIEW

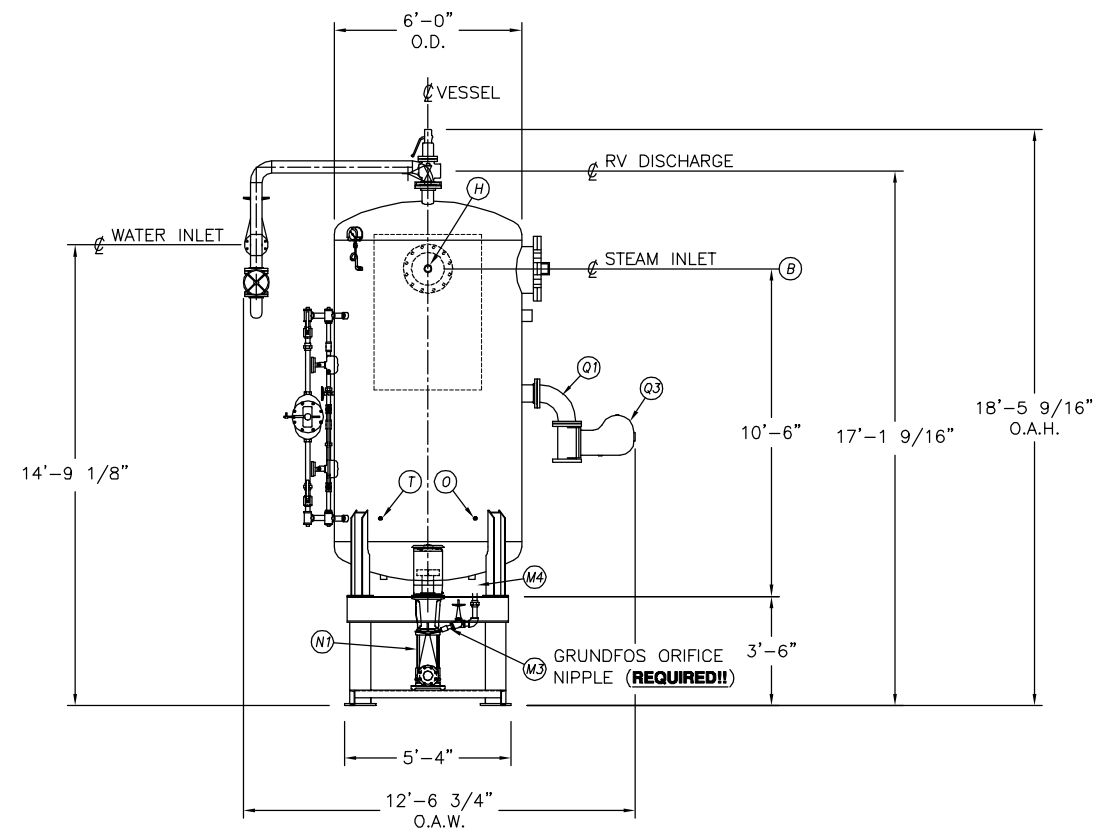

END VIEW

A1		INLET VALVE		NONE	
A2		CONTROLLER		NONE	
A3	3	BYPASS VALVES	2	NIBCO	T-111
A4	1	MAKE UP BY-PASS PIPING	2	KCD SHOP	
A5		STRAINER		NONE	
B1		STEAM PRV		NONE	
B2		STEAM CONTROLLER		NONE	
B3		BYPASS VALVES		NONE	
B4		STEAM PRV BY-PASS PIPING		NONE	
B5	1	STRAINER	3	MUELLER	752
C1		RELIEF VALVE		NONE	
C2		RELIEF VALVE PIPING		NONE	
D1		THERMOMETER		NONE	
		THERMOWELL		NONE	
E1		PRESSURE GAUGE		NONE	
E2		SIPHON & COCK		NONE	
E3		PRESSURE TRANS		NONE	
F1		VENT VALVE		NONE	
F2	1	ORIFICE PLATES	#N/A	#N/A	
F3		BYPASS VALVES		NONE	
F4		VENT PIPING		NONE	
G1		MW SPARE GASKETS			
H1		VACUUM BREAKER		NONE	
M1		BFP RECIRC SHUTTOFF			
M2		BFP RECIRC CHECK			
M3		BFP ORIFICE / VALVE			
M4		BFP PIPING		NONE	
M5		BFP PRESSURE GAUGE			
N1	2	BOILER FEED PUMPS	4	GRUNDFOS	CR60-50U
N2	2	ISOLATION VALVE	4	NIBCO	F617-0
N3	2	STRAINER	4	MUELLER	758
N4	2	PIPING	4	KCD SHOP	
N5	2	EXPANSION JOINT	4		
N6		BFP DISC PRESSURE GAUGE			
N7		BFP DISCH CHECK			
N8		BFP DISCH ISOLATION			
O		CHEMICAL FEED QUILL		NONE	
P		MW SPARE GASKETS			
Q1		OVERFLOW VALVE		NONE	
Q2		CONTROLLER		NONE	
Q3		OVERFLOW PIPING		NONE	
R1		LEVEL SWITCHES		NONE	
R2	1	LEVEL SWITCH BRIDLE PIPING	1 1/2	NIBCO	T-111
S1		GAUGE GLASS		NONE	
S2	1	GAUGE GLASS BRIDLE PIPING	1 1/2	NIBCO	T-111
T1					
	2	CONTROL PANEL			
		STARTERS	NONE		
	1	PUMP STAND	14.2		

NOTES:

1. CUSTOMER TO FIELD ALIGN PUMPS AND MOTORS, THEN SEND KCD CERTIFICATION PAPERS.

2. GROUT STAND AS NECESSARY.

UMENT AND THE INFORMATION IT
HAVE BEEN FURNISHED FOR USE
R OWN ORGANIZATION ONLY AND
URPOSE CONSISTENT WITH THE
ON BETWEEN YOUR ORGANIZATION
NSAS CITY DEAERATOR COMPANY.
OPIES OF OR DATA FROM THIS
T SHALL BE FURNISHED TO ANY
PARTY WITHOUT THE WRITTEN
OF KANSAS CITY DEAERATOR CO.,
RLAND PARK, KANSAS 66209

NO.	DATE	DESCRIPTION OF CHANGE	BY
–	–	–	–
–	–	–	–
–	–	–	–

CLIENT:

KANSAS CITY DEAERATOR CO.
6731 W. 121st STREET
OVERLAND PARK, KANSAS 66209
(913) 338–2111 FAX (913) 338–2144

JOB #	SCALE	DESIGNED	DRAWN	CHECKED	DATE	UTD
STD	NTS	MK	GENI	PC	1–16 2004	1–16 2004

TITLE: GENERAL ARRANGEMENT

MODEL: VTP149–6010–05–CR64–3

DWG. NO.: VTP149–6010–05–CR64–3

Click Here & Upgrade
Expanded Features
Unlimited Pages
PDF Complete